C.I.P.	6,5 Grendel Country of Origin: **US**	TAB: I Date: 13-05-22 Revision: 15-05-19

Alternative Names: -

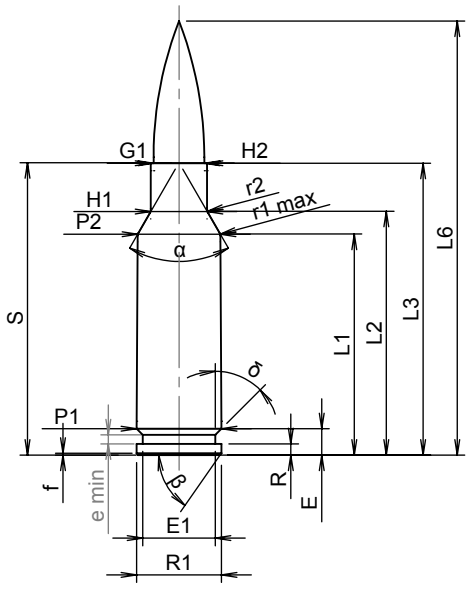

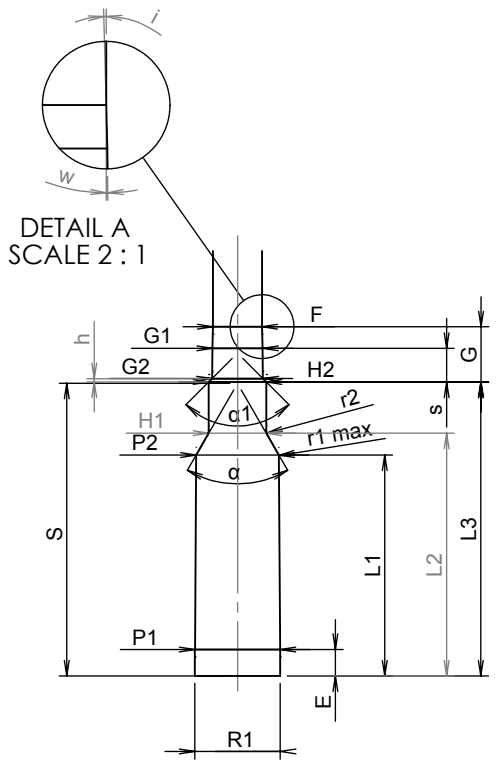

CARTRIDGE MAXI

Lenghts

L1 [1] =	**29.23**	**-0.20**
L2 [1] =	**32.25**	**-0.20**
L3 [1] =	**38.61**	
L4 =	**-**	
L5 =	**-**	
L6 =	**57.40**	

Case Head

R =	**1.50**
R1 =	**11.20**
R3 =	**-**
E =	**3.5**
E1 =	**9.60**
e min =	**1.19**
δ =	**45.00°**
f =	**0.25**
β =	**55.00°**

Powder Chamber

P1 =	**11.22**	
P2[1]* =	**10.92**	**-0.20**

Junction Cone

α* =	**60.00°**
S* =	**38.68**
r1 min=	**0.76**
r2 =	**1.27**

Collar

H1* =	**7.44**
H2[1] =	**7.44**

Projectile

G1[1] =	**6.71**
G2 =	**-**
F =	**-**
L3+G[1]=	**45.93**

Pressures(Energies)
Method Transducer

Pmax =	**4050 bar**
PK =	**4658 bar**
PE =	**5063 bar**
M =	**25.00**
EE =	**2800 Joule**

Miscellaneous Dimensions

Fe[1)3)] =	**0.10**
delta L =	**-**

CHAMBER MINI

Lenghts

L1 =	**29.21**
L2 =	**32.09**
L3 [1] =	**38.86**

Breech

R =	**-**
R1 =	**11.30**
R2 =	**-**
R3 =	**-**
r =	**-**

Powder Chamber

E =	**3.5**
P1[1] =	**11.26**
P2* =	**10.95**

Junction Cone

α[1]* =	**60.00°**
S* =	**38.69**
r1 max=	**0.51**
r2 =	**1.52**

Collar

H1* =	**7.62**
H2[1] =	**7.62**
G2[1]* =	**6.72**

Commencement of Rifling

G1[1]* =	**6.65**
G[1] =	**7.32**
α1 =	**90.00°**
h =	**0.45**
s* =	**4.46**
i[1]* =	**1°30'00"**
w[1]* =	**0°30'00"**

Barrel

F[1]* =	**6.50**
Z[1] =	**6.71**

Grooves

b =	**2.29**
N =	**6**
u =	**200**
Q =	**34.66 mm²**

Dimensions in <<mm>>
Dimensions and Tolerances for Proof Barrels
see Appendix CR1.

Notes: 1) Check for safety reason
3) Headspace on Shoulder
* Basic dimensions